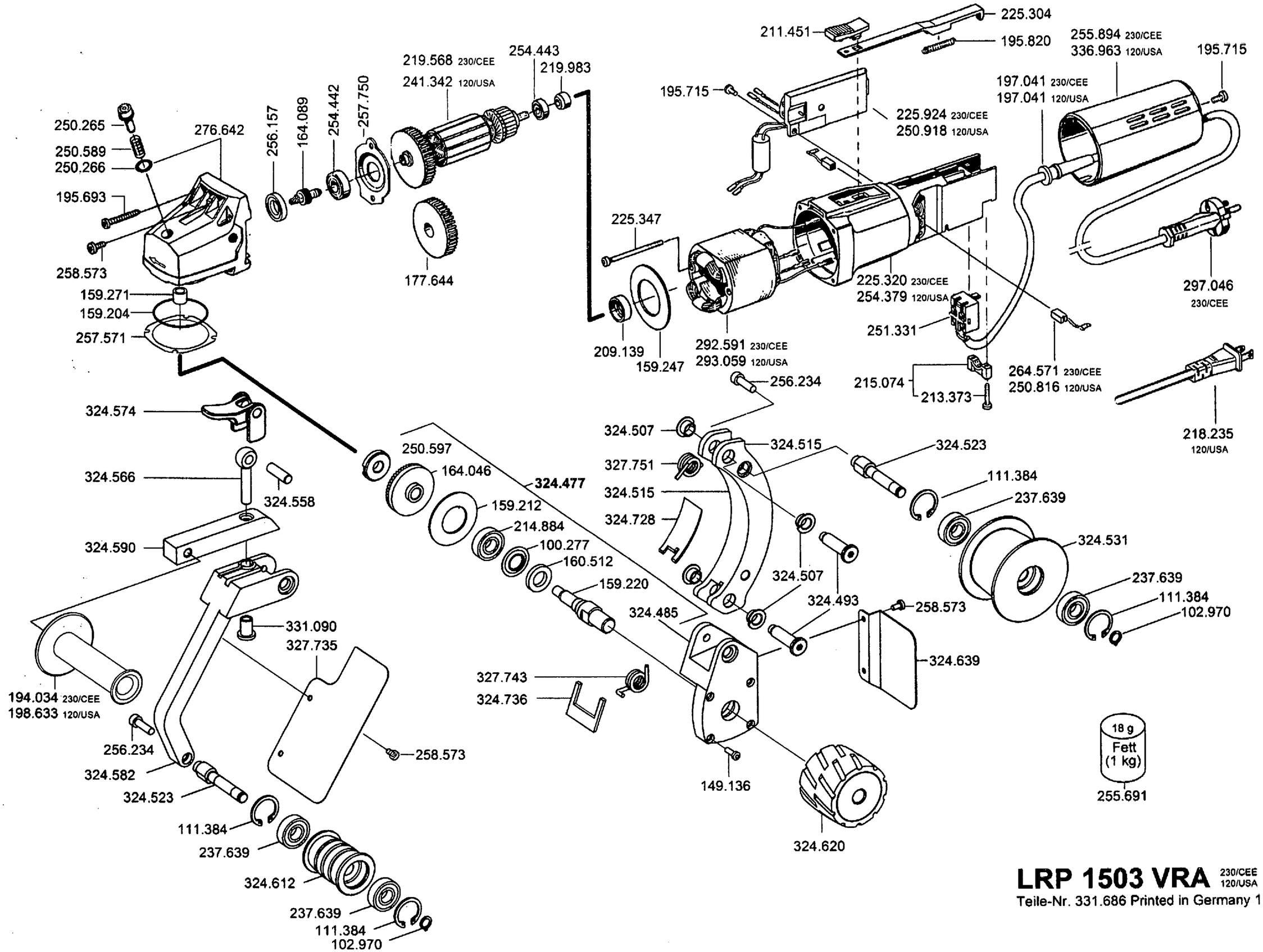

LRP 1503 VRA 230/CEE 120/USA

Teile-Nr. 331.686 Printed in Germany 11/07